VIR-50500D-CS

1. Focal Length : 5 ~ 50 mm
2. Back Focal Length : 8.16 ~ 9.8 mm
3. Distortion : (1/3" CCD) −1.3% ~ −0.4%
4. Aperture Ratio : 1.4 ~ 360
5. Max. Image Format : 4.90 x 3.69 mm (ø6.13mm)
6. Operation : Iris / Auto(DC Type), Focus / Manual
7. Angle of View : (1/3" CCD) 66.5°~7.4°(D)/53.4°~5.8°(H)/40.2°~4.4°(V)
   (1/4" CCD) 50.2°~5.6°(D)/40.2°~4.4°(H)/30.4°~3.3°(V)
8. Lens Construction : 11 Components 12 Elenments
9. Weight : 120g

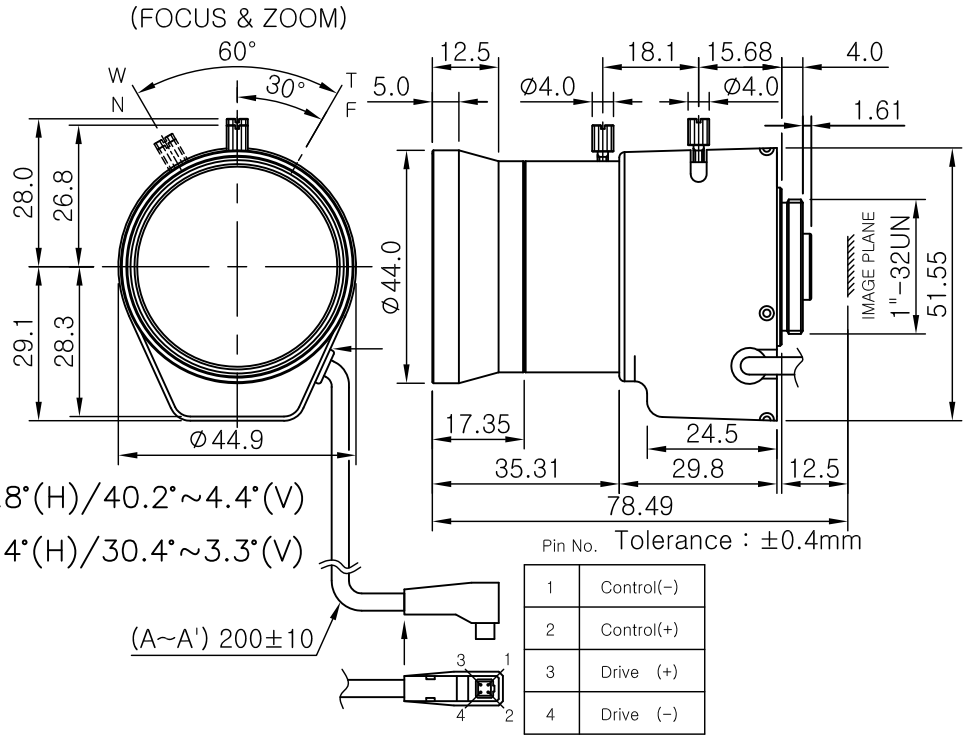

Tolerance : ±0.4mm

Pin No.	
1	Control(−)
2	Control(+)
3	Drive (+)
4	Drive (−)